Dart Aerospace Ltd.

Date: Wednesday, 10/3/2007 8:35:21 AM
User: Kim Johnston

44

Process Sheet

Customer	: CU-DAR001 Dart Helicopters Services	Drawing Name	: HELI ACCESS STEP EXT HIGH GEAR
Job Number	: 34975		
Estimate Number	: 12874		
P.O. Number	:	Part Number	: D205633025
This Issue	: 10/3/2007 S.O. No. :	Drawing Number	: DSI 9300 REV B
Prsht Rev.	: NC	Project Number	: N/A
First Issue	: / / Type : LARGE FAB ASSY	Drawing Revision	: B
Previous Run	: 32508	Material	:
Written By	:	Due Date	: 10/30/2007 Qty: 2 Um: Each
Checked & Approved By	: 07.10.03		
Comment	: Est Rev.B Added D3165-1 KJ/JLM 05-09-09		

Additional Product

Job Number:

Seq. #:	Machine Or Operation:	Description :
1.0	DC	DOCUMENT CONTROL
	Comment: DOCUMENT CONTROL Photocopy bluefile & type labels per PPPD205-633-025 CHG001	07.10.04
2.0	PACKAGING 1	PACKAGING RESOURCE #1
	Comment: PACKAGING RESOURCE #1 Pick Packing Kit	
3.0	D2022101	Spacer
	Comment: Qty.: 4.0000 Each(s)/Unit Total : 8.0000 Each(s) Spacer Batch: B30543	
4.0	D2022103	Spacer
	Comment: Qty.: 2.0000 Each(s)/Unit Total : 4.0000 Each(s) Spacer Batch: B25967	
5.0	D2562005	Strut
	Comment: Qty.: 1.0000 Each(s)/Unit Total : 2.0000 Each(s) Strut Batch: B32575	07/10/15

Form: rprocess

Dart Aerospace Ltd

W/O:		WORK ORDER CHANGES						
DATE	STEP	PROCEDURE CHANGE		By	Date	Qty	Approval Chief Eng / Prod Mgr	Approval QC Inspector

Part No: _____ **PAR #:** _____ **Fault Category:** _____ **NCR:** Yes No **DQA:** _____ **Date:** _____

QA: N/C Closed: _____ **Date:** _____

NCR:		WORK ORDER NON-CONFORMANCE (NCR)							
DATE	STEP	Description of NC Section A	Corrective Action Section B				Verification Section C	Approval Chief Eng	Approval QC Inspector
			Initial Chief Eng	Action Description Chief Eng		Sign & Date			

NOTE: Date & initial all entries

Date: Wednesday, 10/3/2007 8:35:22 AM
User: Kim Johnston

Process Sheet

Customer: CU-DAR001 Dart Helicopters Services
Drawing Name: HELI ACCESS STEP EXT HIGH GEAR

Job Number: 34975
Part Number: D205633025

Job Number:

Seq. #:	Machine Or Operation:	Description :
6.0	D2563	Step Weldment Assembly
	Comment: Qty.: 1.0000 Each(s)/Unit Total : 2.0000 Each(s) Step Weldment Assembly Batch: 34346A	7/10/15 SP (2x)
7.0	D31651	Support Arm
	Comment: Qty.: 1.0000 Each(s)/Unit Total : 2.0000 Each(s) Support Arm Batch: B34988	
8.0	D2565301	Strut
	Comment: Qty.: 1.0000 Each(s)/Unit Total : 2.0000 Each(s) Strut Batch: B26639	
9.0	D2565303	Strut
	Comment: Qty.: 1.0000 Each(s)/Unit Total : 2.0000 Each(s) Strut Batch: B26640	
10.0	D2565305	Strut
	Comment: Qty.: 1.0000 Each(s)/Unit Total : 2.0000 Each(s) Strut Batch: B26641	
11.0	D2565307	Strut
	Comment: Qty.: 1.0000 Each(s)/Unit Total : 2.0000 Each(s) Strut Batch: B26642	
12.0	D2565309	Strut
	Comment: Qty.: 1.0000 Each(s)/Unit Total : 2.0000 Each(s) Strut Batch: B26643	07/10/15 (2)

Dart Aerospace Ltd

W/O:		WORK ORDER CHANGES						
DATE	STEP	PROCEDURE CHANGE		By	Date	Qty	Approval Chief Eng / Prod Mgr	Approval QC Inspector

Part No: _____ **PAR #:** _____ **Fault Category:** _____ **NCR:** Yes No **DQA:** _____ **Date:** _____

QA: N/C Closed: _____ **Date:** _____

NCR:		WORK ORDER NON-CONFORMANCE (NCR)							
DATE	STEP	Description of NC Section A	Corrective Action Section B				Verification Section C	Approval Chief Eng	Approval QC Inspector
			Initial Chief Eng	Action Description Chief Eng		Sign & Date			

NOTE: Date & initial all entries

H:\fFORMS\Quality Assurance\approved QA\NCRWO RevD

Date: Wednesday, 10/3/2007 8:35:22 AM
User: Kim Johnston

Process Sheet

Customer: CU-DAR001 Dart Helicopters Services **Drawing Name:** HELI ACCESS STEP EXT HIGH GEAR

Job Number: 34975 **Part Number:** D205633025

Job Number:

Seq. #:	Machine Or Operation:	Description :
13.0	D3437045	Aft Strut Assembly
	Comment: Qty.: 1.0000 Each(s)/Unit Total : 2.0000 Each(s) Aft Strut Assembly Batch: B34294	
14.0	AN45A	Bolt
	Comment: Qty.: 1.0000 Each(s)/Unit Total : 2.0000 Each(s) Bolt Batch: M100857	
15.0	AN46A	Bolt
	Comment: Qty.: 3.0000 Each(s)/Unit Total : 6.0000 Each(s) Bolt Batch: M104322	
16.0	AN47A	Bolt
	Comment: Qty.: 1.0000 Each(s)/Unit Total : 2.0000 Each(s) Bolt Batch: M102140	
17.0	AN412A	Bolt
	Comment: Qty.: 1.0000 Each(s)/Unit Total : 2.0000 Each(s) Bolt Batch: M105143	
18.0	AN414A	Bolt
	Comment: Qty.: 1.0000 Each(s)/Unit Total : 2.0000 Each(s) Bolt Batch: M102473	
19.0	AN44 7A	EYEBOLT
	Comment: Qty.: 1.0000 Each(s)/Unit Total : 2.0000 Each(s) EYEBOLT Batch: M18034 **********ENSURE THIS IS AN44-7A EYEBOLT**********	

07/11/15 (2)

Form: rprocess

Dart Aerospace Ltd

W/O:		WORK ORDER CHANGES						
DATE	STEP	PROCEDURE CHANGE		By	Date	Qty	Approval Chief Eng / Prod Mgr	Approval QC Inspector

Part No: _____ **PAR #:** _____ **Fault Category:** _____ **NCR:** Yes No **DQA:** _____ **Date:** _____

QA: N/C Closed: _____ **Date:** _____

NCR:		WORK ORDER NON-CONFORMANCE (NCR)							
DATE	STEP	Description of NC Section A	Corrective Action Section B				Verification Section C	Approval Chief Eng	Approval QC Inspector
			Initial Chief Eng	Action Description Chief Eng		Sign & Date			

NOTE: Date & initial all entries

Date: Wednesday, 10/3/2007 8:35:22 AM
User: Kim Johnston

Process Sheet

Customer: CU-DAR001 Dart Helicopters Services
Drawing Name: HELI ACCESS STEP EXT HIGH GEAR

Job Number: 34975
Part Number: D205633025

Job Number:

Seq. #:	Machine Or Operation:	Description :
20.0	AN514A	Bolt
	Comment: Qty.: 1.0000 Each(s)/Unit Total : 2.0000 Each(s) Bolt Batch:	
21.0	AN514A	Bolt
	Comment: Qty.: 1.0000 Each(s)/Unit Total : 2.0000 Each(s) Bolt Batch: M101291	
22.0	AN960JD416	Washer
	Comment: Qty.: 14.0000 Each(s)/Unit Total : 28.0000 Each(s) Washer Batch: M104746	
23.0	AN960JD516	Washer
	Comment: Qty.: 3.0000 Each(s)/Unit Total : 6.0000 Each(s) Washer Batch: M104756	
24.0	MS21042L4	Nut
	Comment: Qty.: 7.0000 Each(s)/Unit Total : 14.0000 Each(s) Nut Batch: M104683	
25.0	MS21042L5	Nut
	Comment: Qty.: 2.0000 Each(s)/Unit Total : 4.0000 Each(s) Nut M104812	07/10/15
26.0	QC4	INSPECT 100% KITS FOR COMPLETENESS
	Comment: INSPECT 100% KITS FOR COMPLETENESS	07/10/15

Form: rprocess

Dart Aerospace Ltd

W/O:		WORK ORDER CHANGES						
DATE	STEP	PROCEDURE CHANGE	By	Date	Qty	Approval Chief Eng / Prod Mgr	Approval QC Inspector
07.10.16	20.0 / 21.0	Step 20.0 parts were repeated to 21.0. Remove step 20.0, perm. change		07.10.16	-	07.10.16	07.10.16

Part No: _____ **PAR #:** _____ **Fault Category:** _____ **NCR:** Yes No **DQA:** _____ **Date:** _____

QA: N/C Closed: _____ **Date:** _____

NCR:		WORK ORDER NON-CONFORMANCE (NCR)							
DATE	STEP	Description of NC Section A	Corrective Action Section B				Verification Section C	Approval Chief Eng	Approval QC Inspector
			Initial Chief Eng	Action Description Chief Eng		Sign & Date			

NOTE: Date & initial all entries

H:\fFORMS\Quality Assurance\approved QA\NCRWO RevD

Date: Wednesday, 10/3/2007 8:35:22 AM
User: Kim Johnston

Process Sheet

Customer: CU-DAR001 Dart Helicopters Services

Drawing Name: HELI ACCESS STEP EXT HIGH GEAR

Job Number: 34975

Part Number: D205633025

Job Number:

Seq. #:	Machine Or Operation:	Description :
27.0	PACKAGING 1	PACKAGING RESOURCE #1

Comment: PACKAGING RESOURCE #1
Identify and pack for shipping as per PPP D205-633-025
Location: Draft
PPP Rev:

7/10/15 SH

28.0	QC21	FINAL INSPECTION/W/O RELEASE

07.10.16

Comment: FINAL INSPECTION/W/O RELEASE

Job Completion

U 07-10-16

Form: rprocess

Dart Aerospace Ltd

W/O:		WORK ORDER CHANGES						
DATE	STEP	PROCEDURE CHANGE		By	Date	Qty	Approval Chief Eng / Prod Mgr	Approval QC Inspector

Part No: _____ **PAR #:** _____ **Fault Category:** _____ **NCR:** Yes No **DQA:** _____ **Date:** _____

QA: N/C Closed: _____ **Date:** _____

NCR:		WORK ORDER NON-CONFORMANCE (NCR)							
DATE	STEP	Description of NC Section A	Corrective Action Section B				Verification Section C	Approval Chief Eng	Approval QC Inspector
			Initial Chief Eng	Action Description Chief Eng		Sign & Date			

NOTE: Date & initial all entries

H:\fFORMS\Quality Assurance\approved QA\NCRWO RevD

DESIGN	DRAWN BY	DART AEROSPACE LTD HAWKESBURY, ONTARIO, CANADA
RF	RF	
CHECKED	APPROVED	DRAWING NO. REV. B DSI 9300 SHEET 1 OF 6
DATE 05.08.12		TITLE SCALE SIMPLEX TANK STEP NTS

A	05.05.05	NEW ISSUE
B	05.08.12	ADD STRUTS IF TANK REMOVED

DART SERVICE INSTRUCTION

TO AMEND INSTALLATION INSTRUCTIONS IIN-D205-633 REV. A

REF. CANADIAN STC: SH96-57

REF. FAA STC: SR00592NY, SR00593NY, SR00594NY

THE PURPOSE OF THIS SERVICE INSTRUCTION IS TO ADD THE D205-633-021/-022/-023/-024/-025/-026 STEPS TO ADDRESS COMPATABILITY WITH THE SIMPLEX MODEL 304 FIRE ATTACK TANK. D205-633-021/-022 ARE IDENTICAL TO D205-633-011, EXCEPT AS SHOWN HERE. D205-633-023/-024 ARE IDENTICAL TO D205-633-013, EXCEPT AS SHOWN HERE. D205-633-025/-026 ARE IDENTICAL TO D205-633-015, EXCEPT AS SHOWN HERE.

NOTE THAT THE STRUTS REQUIRED TO INSTALL THE STEPS ON THE LOWER AFT HARDPOINT HAVE ALSO BEEN INCLUDED WITH THE KITS IN CASE THE TANK IS REMOVED FOR ANY REASON. THESE STRUTS SHOUD BE INSTALLED I.A.W. IIN-D205-633, EXCEPT REPLACE EYEBOLT WITH AN4 BOLT ON LOWER HARDPOINT. ALSO NOTE THAT IF THE THREADS PROTRUDE THROUGH THE BAR ON THE D3437-XXX STRUT ASSEMBLIES AFTER ADJUSTMENT THEY MAY BE TRIMMED OFF.

WEIGHT AND BALANCE

Installation	Weight	LATERAL		LONGITUDINAL	
		Arm	Moment	Arm	Moment
D205-633-021 *HELI-ACCESS-STEP™*	14.0 lb 6.35 kg	-50.0 in -1.27 m	-700 in lb -8.06 m kg	94.5 in 2.40 m	1323 in lb 15.24 m kg
D205-633-022 *HELI-ACCESS-STEP™*	13.2 lb 6.00 kg	+50.0 in +1.27 m	+660 in lb +7.62 m kg	94.5 in 2.40 m	1247 in lb 14.40 m kg
D205-633-023 *HELI-ACCESS-STEP™*	14.3 lb 6.50 kg	-50.0 in -1.27 m	-715 in lb -8.26 m kg	94.5 in 2.40 m	1351 in lb 15.6 m kg
D205-633-024 *HELI-ACCESS-STEP™*	13.5 lb 6.14 kg	+50.0 in +1.27 m	+675 in lb +7.80 m kg	94.5 in 2.40 m	1276 in lb 14.74 m kg
D205-633-025 *HELI-ACCESS-STEP™*	14.6 lb 6.64 kg	-50.0 in -1.27 m	-730 in-lb -8.43 m-kg	94.5 in 2.40 m	1380 in-lb 15.94 m-kg
D205-633-026 *HELI-ACCESS-STEP™*	13.8 lb 6.27 kg	+50.0 in +1.27 m	+690 in-lb +7.96 m-kg	94.5 in 2.40 m	1304 in-lb 15.05 m-kg

SHOP COPY
RETURN TO
ENGINEERING
UNCONTROLLED COPY
SUBJECT TO AMENDMENT
WITHOUT NOTICE
WORK ORDER
NO. 34975

CANADA
DEPARTMENT OF TRANSPORT
AIRCRAFT CERTIFICATION
BRANCH
DAO # 01-O-01

APPROVED

BY: _____
D. SHEPHERD (DE # 02)

DATE: 05.08.12
CERT. NO.: SH96-57
ISSUE NO.: #5

Copyright © 2005 by DART AEROSPACE LTD

THIS DOCUMENT IS PRIVATE AND CONFIDENTIAL AND IS SUPPLIED ON THE EXPRESS CONDITION THAT IT IS NOT TO BE USED FOR ANY PURPOSE OR COPIED OR COMMUNICATED TO ANY OTHER PERSON WITHOUT WRITTEN PERMISSION FROM DART AEROSPACE LTD.

DESIGN	DRAWN BY	DART AEROSPACE LTD HAWKESBURY, ONTARIO, CANADA	
RF	RF		
CHECKED	APPROVED	DRAWING NO.	REV. B
		DSI 9300	SHEET 2 OF 6
DATE		TITLE	SCALE
05.08.12		SIMPLEX TANK STEP	NTS

PARTS LIST

QTY -021	QTY -022	QTY -023	QTY -024	QTY -025	QTY -026	Part Number	Description
X						**D205-633-021**	***Heli-Access-Step™* (LH), High Gear**
	X					**D205-633-022**	***Heli-Access-Step™* (RH), High Gear**
		X				**D205-633-023**	***Heli-Access-Step™* (LH), Extended High Gear (31")**
			X			**D205-633-024**	***Heli-Access-Step™* (RH), Extended High Gear (31")**
				X		**D205-633-025**	***Heli-Access-Step™* (LH), Extended High Gear (39")**
					X	**D205-633-026**	***Heli-Access-Step™* (RH), Extended High Gear (39")**
4	4	4	4	4	4	D2022-101	SPACER
2	2	2	2	2	2	D2022-103	SPACER
				1	1	D2562-005	STRUT
1	1					D2562-011	STRUT
		1	1			D2562-013	STRUT
1		1		1		D2563	WELDMENT ASSEMBLY
				*1	*1	D3165-1	STRUT
1	1					D2565-101	STRUT
1	1					D2565-103	STRUT
1	1					D2565-105	STRUT
1	1					D2565-107	STRUT
1	1					D2565-109	STRUT
*1	*1					D2565-111	STRUT
		1	1			D2565-201	STRUT
		1	1			D2565-203	STRUT
		1	1			D2565-205	STRUT
		1	1			D2565-207	STRUT
		1	1			D2565-209	STRUT
		*1	*1			D2565-211	STRUT
				1	1	D2565-301	STRUT
				1	1	D2565-303	STRUT
				1	1	D2565-305	STRUT
				1	1	D2565-307	STRUT
				1	1	D2565-309	STRUT
1	1					D3437-041	AFT STRUT ASSEMBLY
		1	1			D3437-043	AFT STRUT ASSEMBLY
				1	1	D3437-045	AFT STRUT ASSEMBLY
	1		1		1	D3438-042	WELDMENT ASSEMBLY
1	1	1	1	1	1	AN4-5A	BOLT
4	4	3	3	3	3	AN4-6A	BOLT
1	1	1	1	1	1	AN4-7A	BOLT
1	1					AN4-11A	BOLT
		1	1	1	1	AN4-12A	BOLT
1	1	1	1	1	1	AN4-14A	BOLT
1	1	1	1	1	1	AN44-7A	EYEBOLT
1	1	1	1	1	1	AN5-14A	BOLT
16	16	14	14	14	14	AN960JD416	WASHER
3	3	3	3	3	3	AN960JD516	WASHER
8	8	7	7	7	7	MS21042L4	NUT (or MS21042-4)
2	2	2	2	2	2	MS21042L5	NUT (or MS21042-5)

SHOP COPY
RETURN TO
ENGINEERING
UNCONTROLLED COPY
SUBJECT TO AMENDMENT
WITHOUT NOTICE
WORK ORDER
NO. 34975

CANADA
DEPARTMENT OF TRANSPORT
AIRCRAFT CERTIFICATION
BRANCH
DAO # 01-O-01

APPROVED
BY: _____
D. SHEPHERD (DE # 02)

DATE: 05.08.12
CERT. NO.: SH96-57
ISSUE NO.: #5

* ONLY INSTALLED IF TANK IS REMOVED

Copyright © 2005 by DART AEROSPACE LTD
THIS DOCUMENT IS PRIVATE AND CONFIDENTIAL AND IS SUPPLIED ON THE EXPRESS CONDITION THAT IT IS NOT TO BE USED FOR ANY PURPOSE OR COPIED OR COMMUNICATED TO ANY OTHER PERSON WITHOUT WRITTEN PERMISSION FROM DART AEROSPACE LTD.

DESIGN	DRAWN BY	DART AEROSPACE LTD HAWKESBURY, ONTARIO, CANADA	
RF	RF		
CHECKED	APPROVED	DRAWING NO.	REV. B
		DSI 9300	3 OF 6
DATE		TITLE	SCALE
05.08.12		SIMPLEX TANK STEP KIT	NTS

INSTALLATION OF D205-633-021/-022/-023/-024/-025/-026

INSTALL D205-633-021/-022 AS PER THE D205-633-011 STEP OF INSTALLATION INSTRUCTIONS IIN-D205-633 REV.A, EXCEPT REPLACE D2565-111 STRUT WITH THE D3437–041 AFT STRUT ASS'Y, REMOVE D2562-001 STRUT, INSTALL D2562-011 STRUT AS SHOWN.

INSTALL D205-633-023/-024 AS PER THE D205-633-013 STEP OF INSTALLATION INSTRUCTIONS IIN-D205-633 REV.A, EXCEPT REPLACE D2565-211 STRUT WITH THE D3437–043 AFT STRUT ASS'Y, REMOVE D2562-003 STRUT, INSTALL D2562-013 STRUT AS SHOWN.

INSTALL D205-633-025/-026 AS PER THE D205-633-015 STEP OF INSTALLATION INSTRUCTIONS IIN-D205-633 REV.A, EXCEPT REPLACE D3165-1 SUPPORT ARM WITH THE D3437–045 AFT STRUT ASS'Y AS SHOWN.

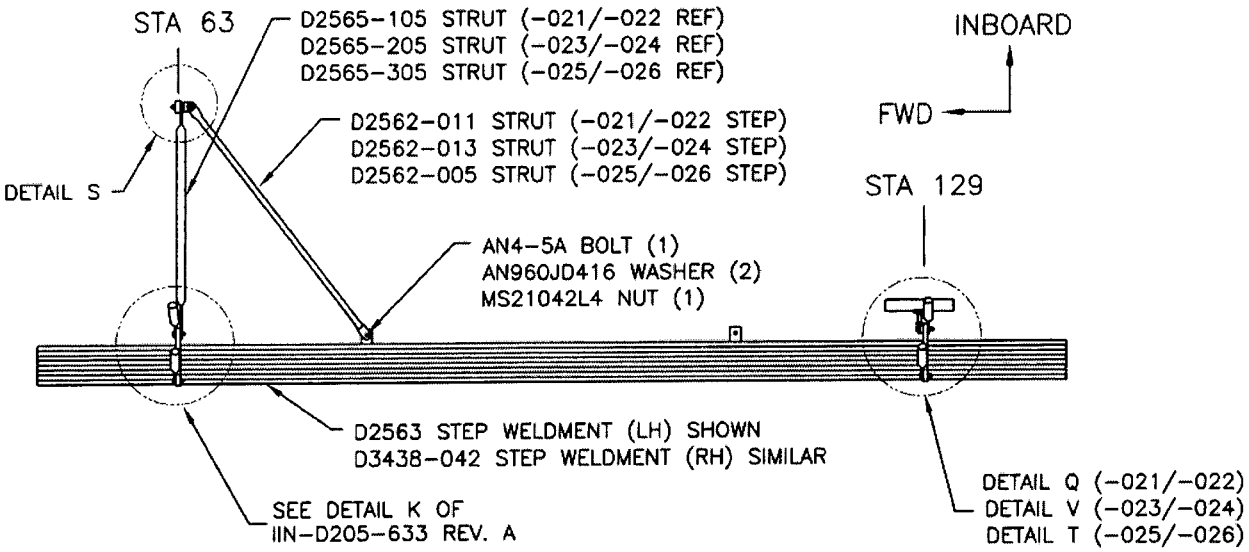

D205–633–021/–023/–025 SHOWN,
D205–633–022/–024/–026 SIMILAR
(VIEW LOOKING DOWN)

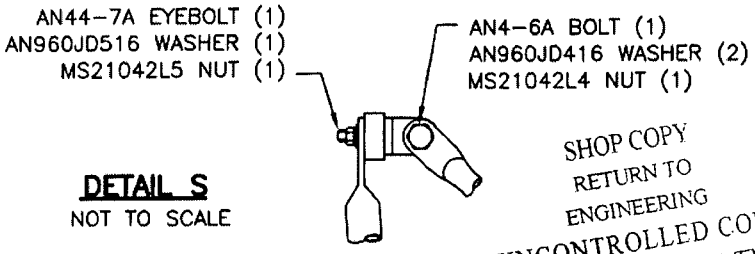

DETAIL S
NOT TO SCALE

SHOP COPY
RETURN TO
ENGINEERING
UNCONTROLLED COPY
SUBJECT TO AMENDMENT
WITHOUT NOTICE
WORK ORDER
NO. 34975

CANADA
DEPARTMENT OF TRANSPORT
AIRCRAFT CERTIFICATION
BRANCH
DAO # 01-O-01

APPROVED
BY: D. SHEPHERD (DE # 02)

DATE: 05.08.12
CERT. NO.: SH96-57
ISSUE NO.: #5

Copyright © 2005 by DART AEROSPACE LTD
THIS DOCUMENT IS PRIVATE AND CONFIDENTIAL AND IS SUPPLIED ON THE EXPRESS CONDITION THAT IT IS NOT TO BE USED FOR ANY PURPOSE OR COPIED OR COMMUNICATED TO ANY OTHER PERSON WITHOUT WRITTEN PERMISSION FROM DART AEROSPACE LTD.

DESIGN	DRAWN BY	DART AEROSPACE LTD HAWKESBURY, ONTARIO, CANADA	
RF	RF		
CHECKED	APPROVED	DRAWING NO.	REV. B
		DSI 9300	SHEET 4 OF 6
DATE		TITLE	SCALE
05.08.12		SIMPLEX TANK STEP	NTS

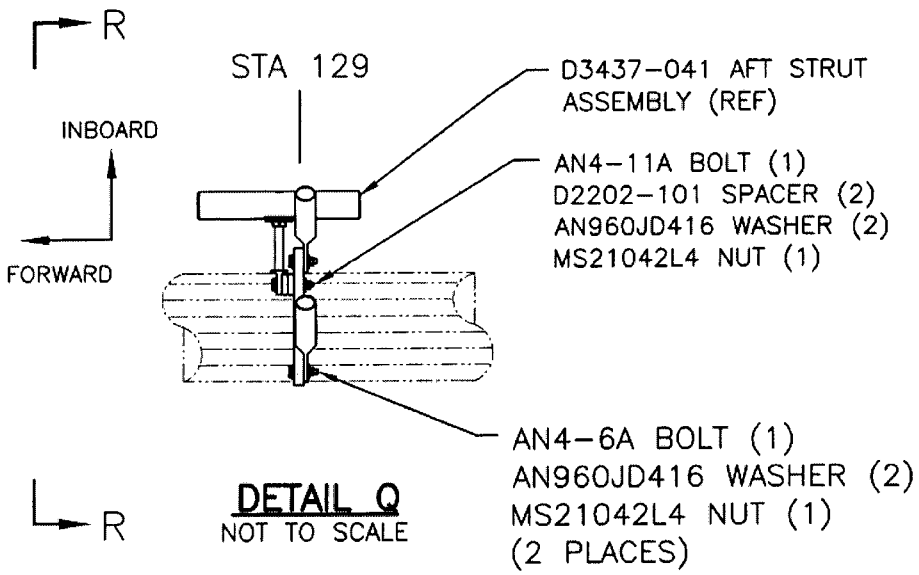

DETAIL Q
NOT TO SCALE

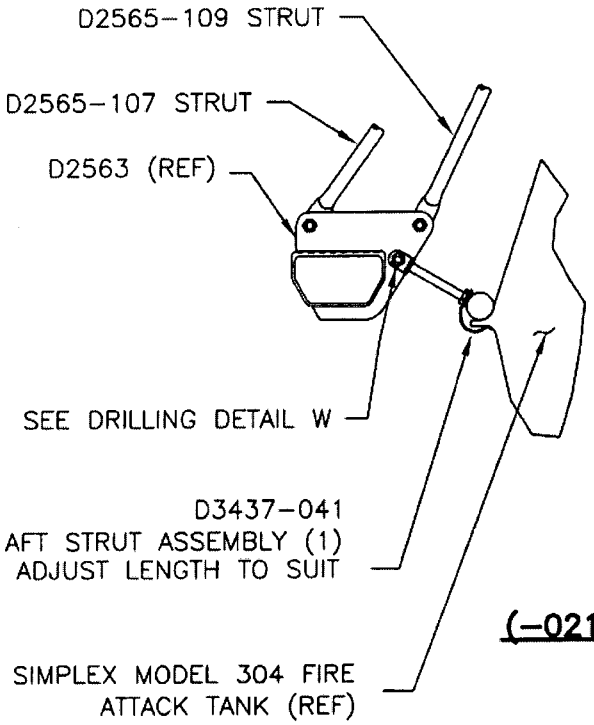

(-021/-022 STEP)

VIEW R-R
NOT TO SCALE

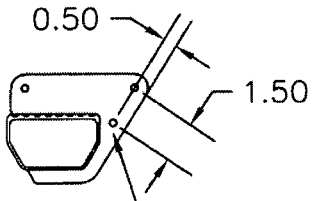

DETAIL W

DRILL ø0.257 THRU,
TOUCH UP WITH
ALODINE 1200 OR 1201
PER MIL-C-5541 AS SHOWN

SHOP COPY
RETURN TO
ENGINEERING
UNCONTROLLED COPY
SUBJECT TO AMENDMENT
WITHOUT NOTICE
WORK ORDER
NO. 34975

CANADA
DEPARTMENT OF TRANSPORT
AIRCRAFT CERTIFICATION
BRANCH
DAO # 01-O-01

APPROVED
BY: _____
D. SHEPHERD (DE # 02)

DATE: 05.08.12
CERT. NO.: SH96-57
ISSUE NO.: #5

Copyright © 2005 by DART AEROSPACE LTD
THIS DOCUMENT IS PRIVATE AND CONFIDENTIAL AND IS SUPPLIED ON THE EXPRESS CONDITION THAT IT IS NOT TO BE USED FOR ANY PURPOSE OR COPIED OR COMMUNICATED TO ANY OTHER PERSON WITHOUT WRITTEN PERMISSION FROM DART AEROSPACE LTD.

DESIGN	DRAWN BY	DART AEROSPACE LTD HAWKESBURY, ONTARIO, CANADA	
RF	RF		
CHECKED	APPROVED	DRAWING NO.	REV. B
		DSI 9300	SHEET 5 OF 6
DATE		TITLE	SCALE
05.08.12		SIMPLEX TANK STEP	NTS

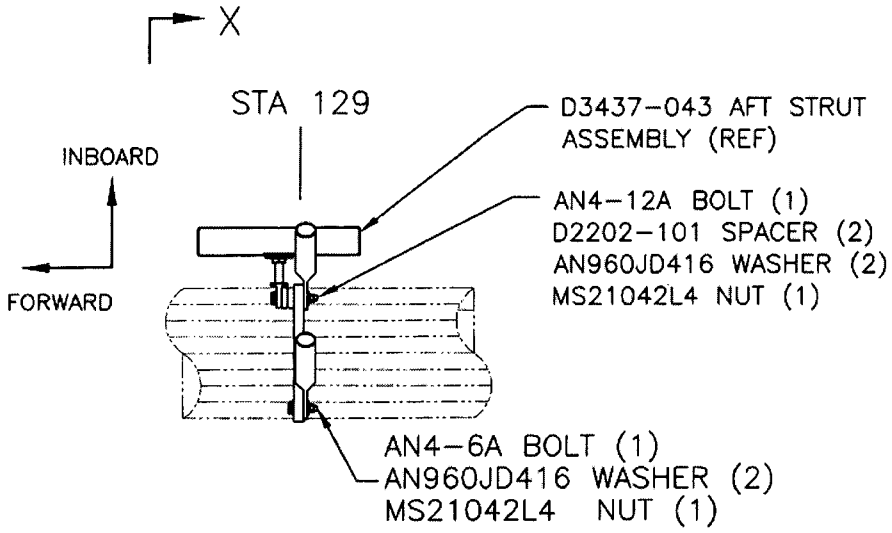

DETAIL V
NOT TO SCALE

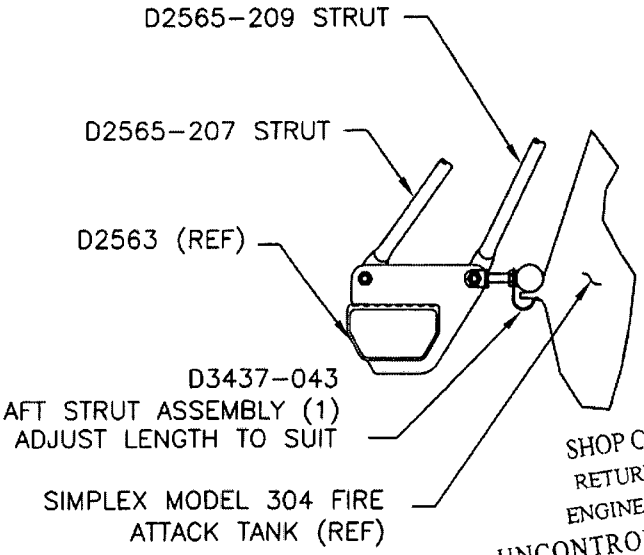

(-023/-024 STEP)

VIEW X-X
NOT TO SCALE

SHOP COPY
RETURN TO
ENGINEERING
UNCONTROLLED COPY
SUBJECT TO AMENDMENT
WITHOUT NOTICE
WORK ORDER
NO. 34975

CANADA
DEPARTMENT OF TRANSPORT
AIRCRAFT CERTIFICATION
BRANCH
DAO # 01-O-01

APPROVED
BY: D. SHEPHERD (DE # 02)

DATE: 05.08.12
CERT. NO.: SH96-57
ISSUE NO.: #5

Copyright © 2005 by DART AEROSPACE LTD
THIS DOCUMENT IS PRIVATE AND CONFIDENTIAL AND IS SUPPLIED ON THE EXPRESS CONDITION THAT IT IS NOT TO BE USED FOR ANY PURPOSE OR COPIED OR COMMUNICATED TO ANY OTHER PERSON WITHOUT WRITTEN PERMISSION FROM DART AEROSPACE LTD.

DESIGN	DRAWN BY	DART AEROSPACE LTD HAWKESBURY, ONTARIO, CANADA	
RF	RF		
CHECKED	APPROVED	DRAWING NO.	REV. B
		DSI 9300	SHEET 6 OF 6
DATE		TITLE	SCALE
05.08.12		SIMPLEX TANK STEP	NTS

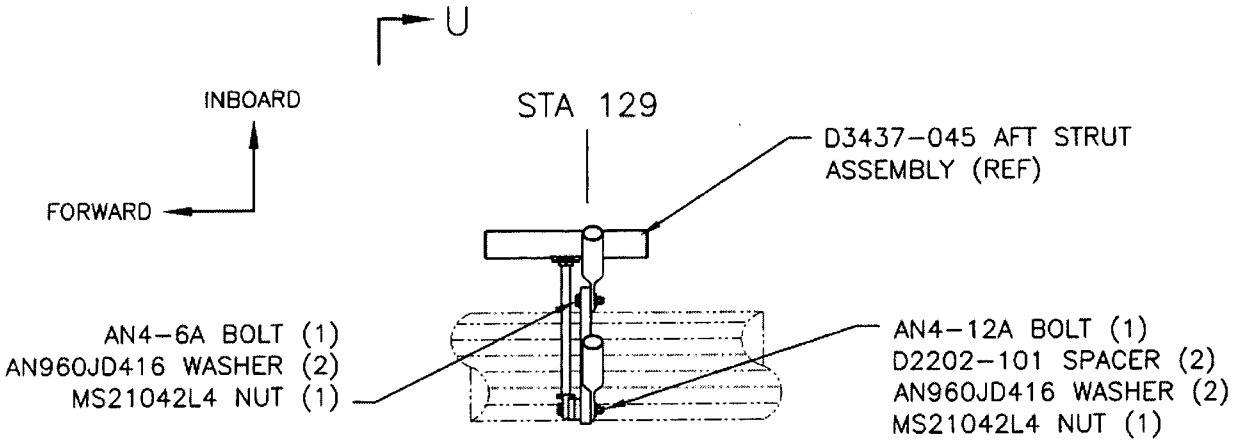

DETAIL T
NOT TO SCALE

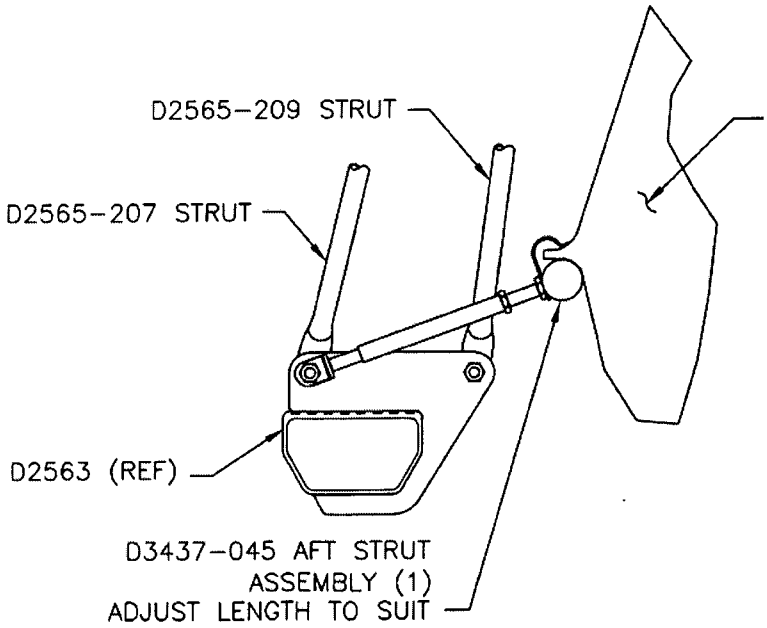

VIEW U-U
NOT TO SCALE

SHOP COPY
RETURN TO ENGINEERING
UNCONTROLLED COPY
SUBJECT TO AMENDMENT WITHOUT NOTICE
WORK ORDER NO. 34975

CANADA
DEPARTMENT OF TRANSPORT
AIRCRAFT CERTIFICATION BRANCH
DAO # 01-O-01

APPROVED
BY: D. SHEPHERD (DE # 02)

DATE: 05.08.12
CERT. NO.: SH96-57
ISSUE NO.: #5

Copyright © 2005 by DART AEROSPACE LTD
THIS DOCUMENT IS PRIVATE AND CONFIDENTIAL AND IS SUPPLIED ON THE EXPRESS CONDITION THAT IT IS NOT TO BE USED FOR ANY PURPOSE OR COPIED OR COMMUNICATED TO ANY OTHER PERSON WITHOUT WRITTEN PERMISSION FROM DART AEROSPACE LTD.